Queen Mary
University of London
Science and Engineering

EBU4202: Digital Circuit Design
Memories Overview & Microcomputer

Dr. Md Hasanuzzaman Sagor (Hasan)
Dr. Chao Shu (Chao)
Dr. Farha Lakhani (Farha)

School of Electronic Engineering and Computer Science,
Queen Mary University of London,
London, United Kingdom.

Memory Devices

4935 6382

- Data Storage Devices
- Classification: 分2走.
  - Serial Access (Disc, Tape)
  - Random Access (ICs)
- Volatile vs. non-volatile
- Read-Only vs. Read/Write

General Model

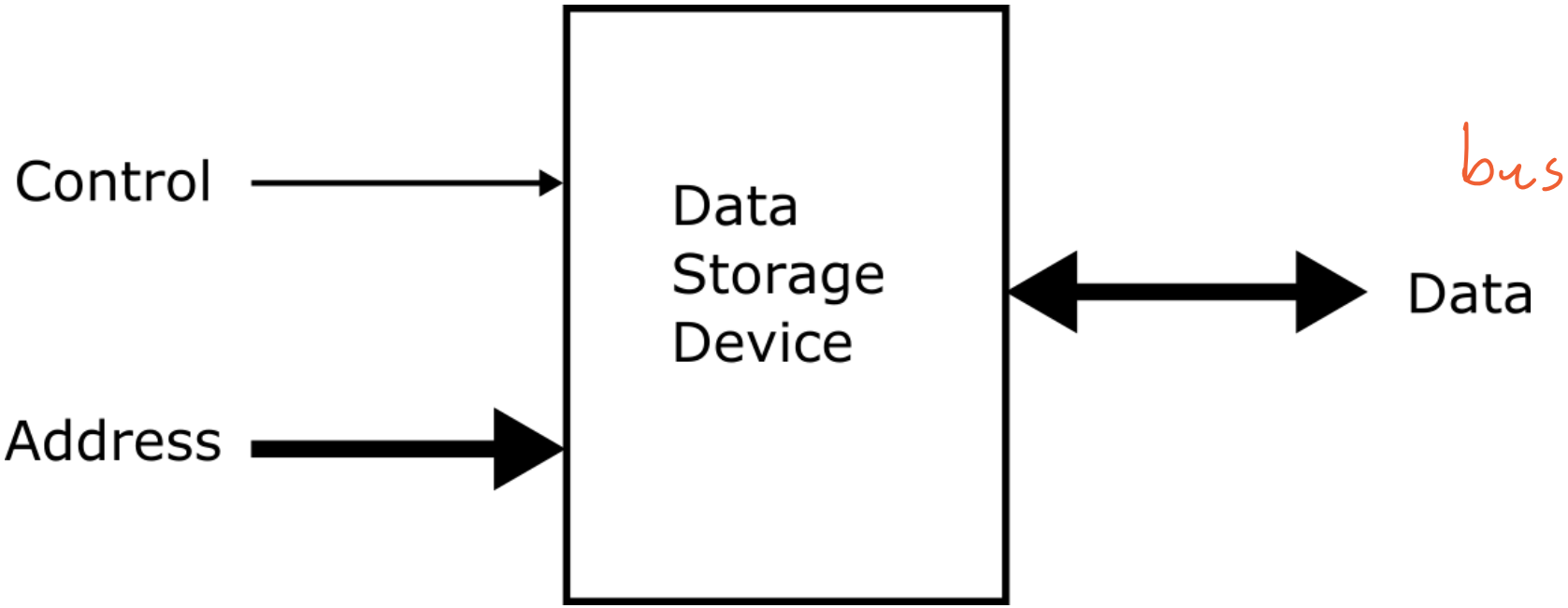

read from / write the bus.

Serial Access

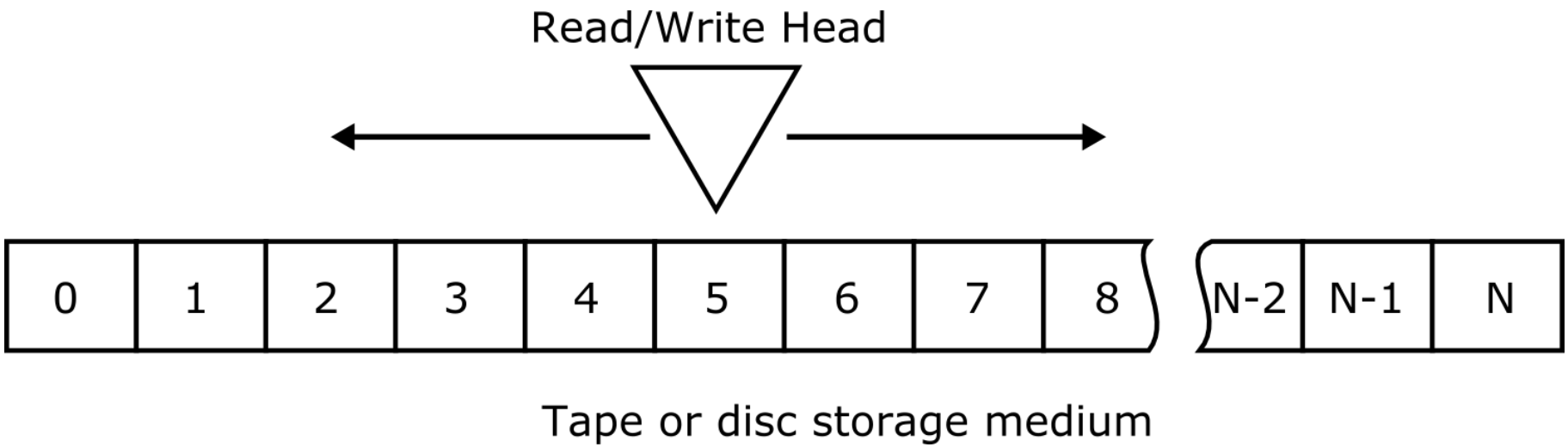

只能1个个挪过去

Stores data bits in series

Head must travel from current position to new address passing the other addresses in between – time consuming

Can store large amounts of data

Random Access

有地址

可以随机读取。

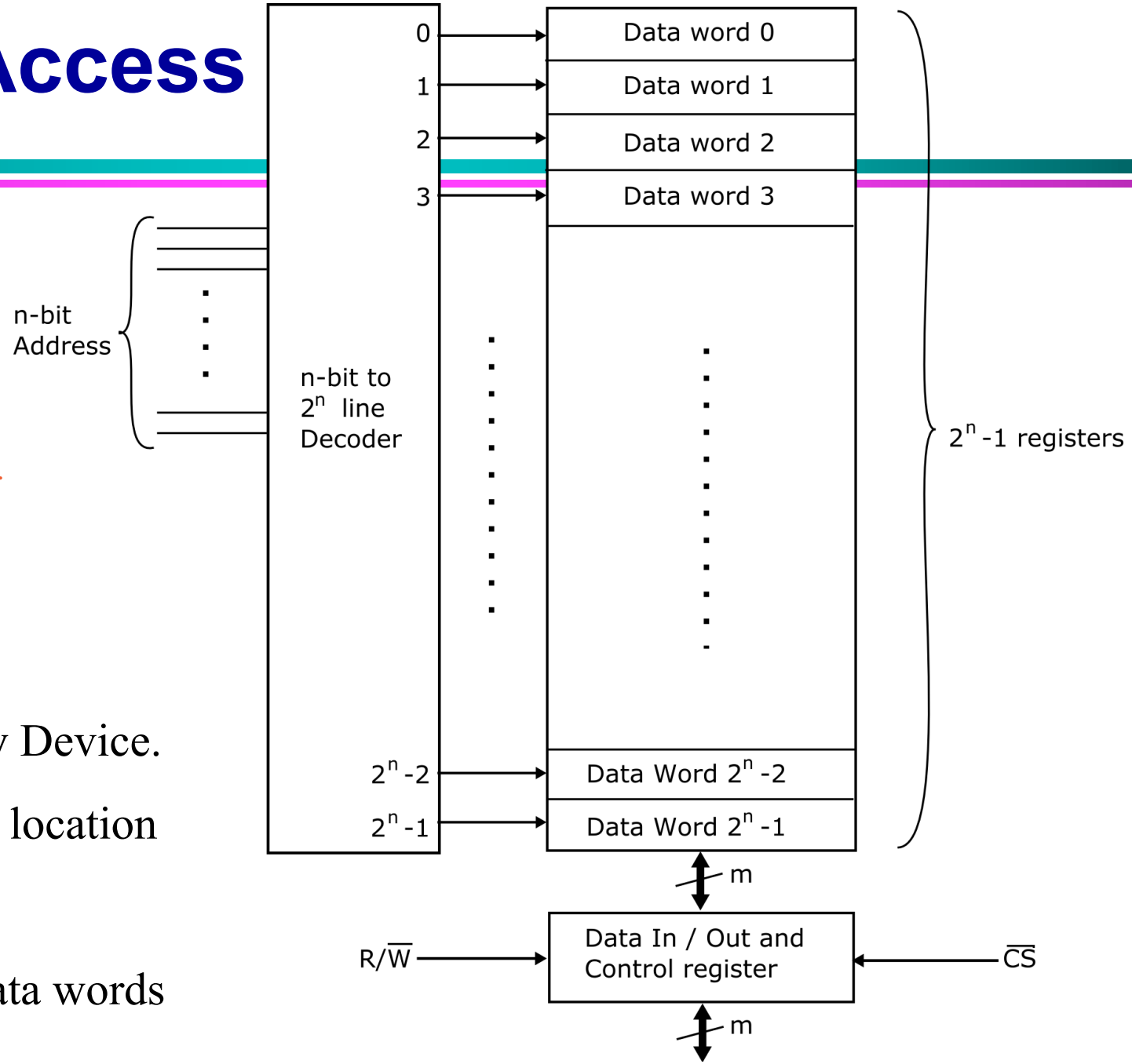

Random Access Memory Device.

Equal time to access any location

n-bit address

Device stores 2^n m-bit data words

Volatile/Non-volatile

断电时丢数据

- Volatile memory loses its contents when the power is switched off
- Non-volatile memory keeps its contents even if there is no power to the device
- Volatile memory is commonly called RAM. Often used as “working memory”
- Non-volatile memory is commonly called as ROM

  只读.
- Both RAM and ROM are random-access

RAM (RWM): Random Access Memory

There are 2 types of RWM (RAM):

- **Static RAM (SRAM):** Uses transistors to store a single bit of information and does not need to be refreshed periodically.

- **Dynamic RAM (DRAM):** Uses a capacitor to store the data bit and needs to be periodically refreshed to maintain the charge in the capacitors.

能存的更多

缺点

相对慢

RAM (RWM): Random Access Memory

SRAM:

- Uses bistable latching circuit to store data (perhaps 6 to 8 transistors).
- It is volatile (although a non-volatile version is available nvSRAM). Batteries internal to the computer can be used to maintain power when the main computer power is switched off.
- It is more expensive and less dense than DRAM. So it is not used for low cost, high capacity applications such as the main memory devices in personal computers.
- It uses little power at low speeds.

RAM (RWM): Random Access Memory

DRAM:

- Uses a capacitor and a single transistor for each bit.
- It is volatile and quickly loses its data when the power is
- removed.
- Because capacitors leak charge, DRAM has to be continually refreshed.
- It is slower than SRAM.
- Because of the small cell size, DRAM can have very high densities.
- It is the main memory in personal computers.

ROM: Read Only Memory

ROM: combinational circuit with n inputs b outputs

- ROM is Read-Only Memory where the contents cannot be changed by normal CPU operations.
- They are used to store fixed data or information.
- The contents of ROM are usually set by manufacturer, but some types of ROM can be written to by the user (programmable)
- For example, PROM (Programmable ROM), which uses a special device called a PROM Programmer.

erasable Rom (DVD)

ROM: Read Only Memory

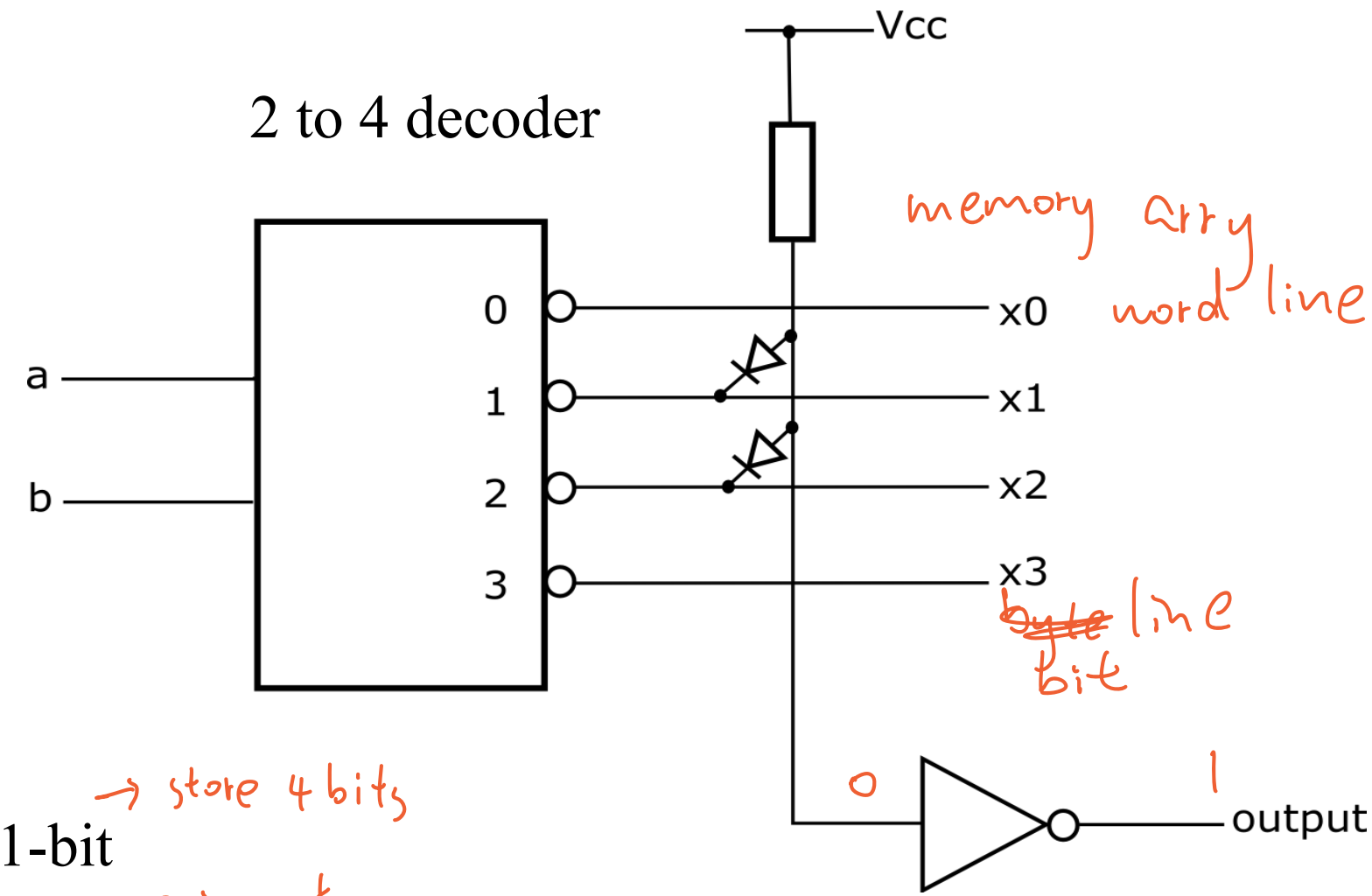

→ store 4 bits

4 × 1-bit

2 input

1 output

ROM: Read Only Memory

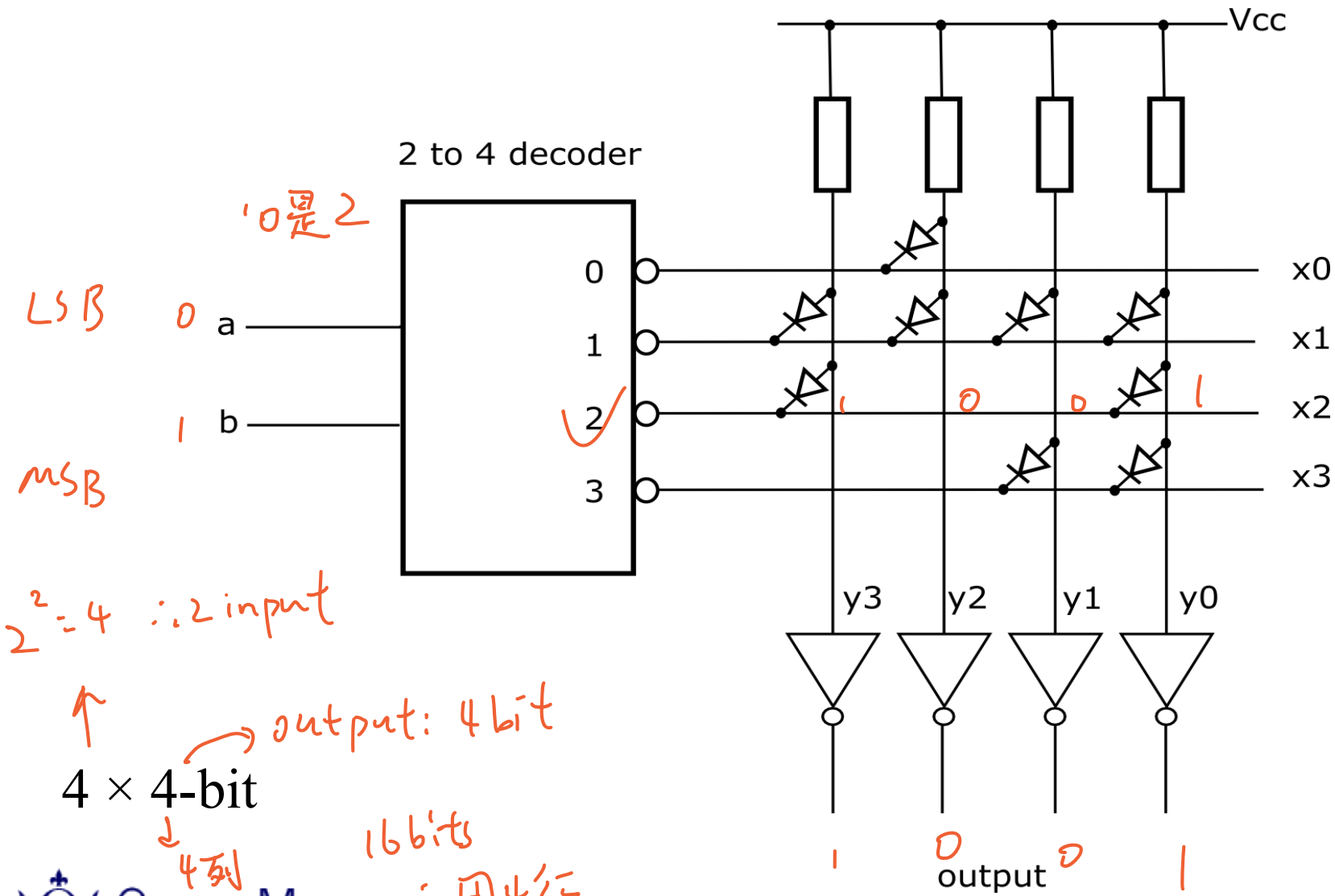

$2^2 = 4$ ∴ 2 input

output: 4 bit

4 × 4-bit

4列

16bits

∴ 用4行

ROM: Read Only Memory

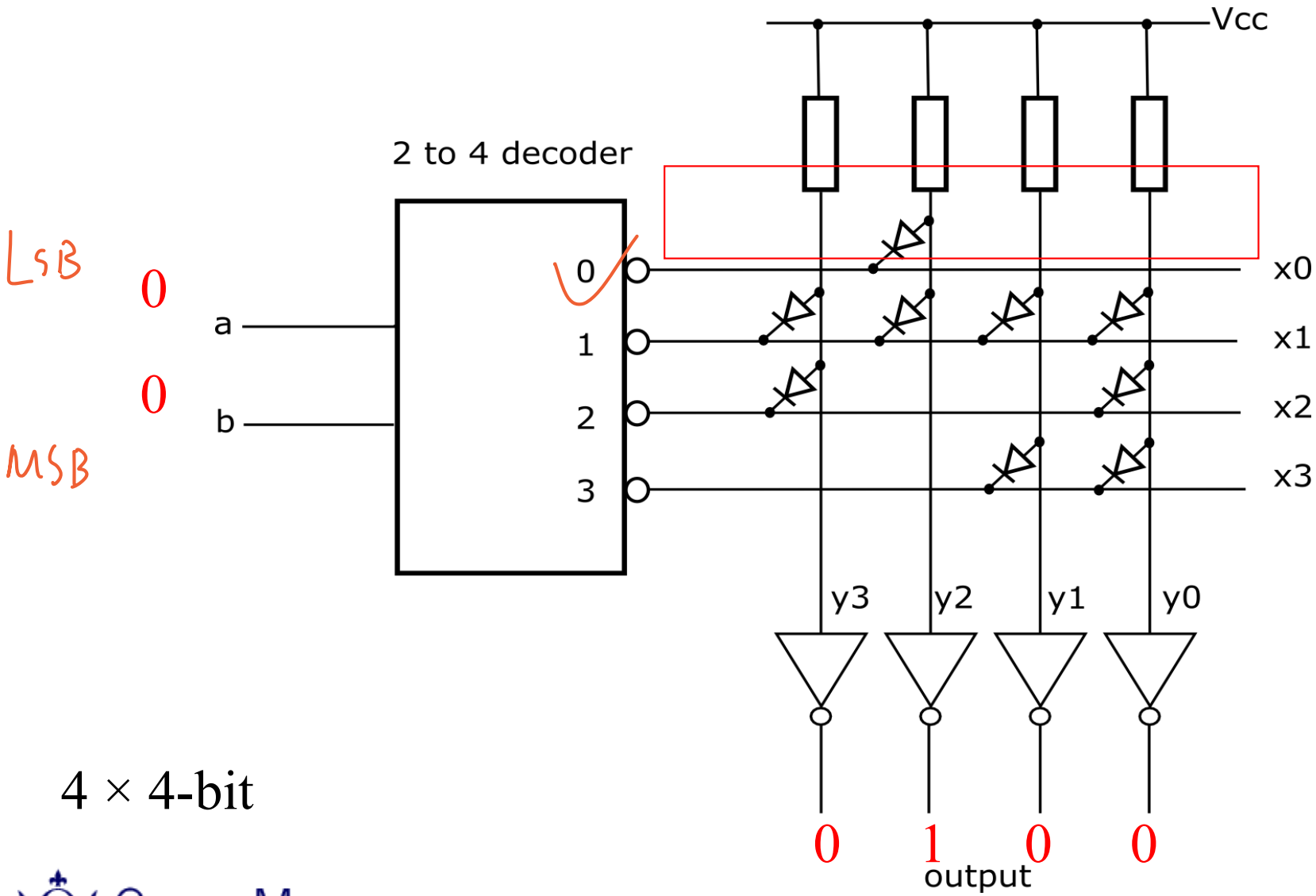

4 × 4-bit

ROM: Read Only Memory

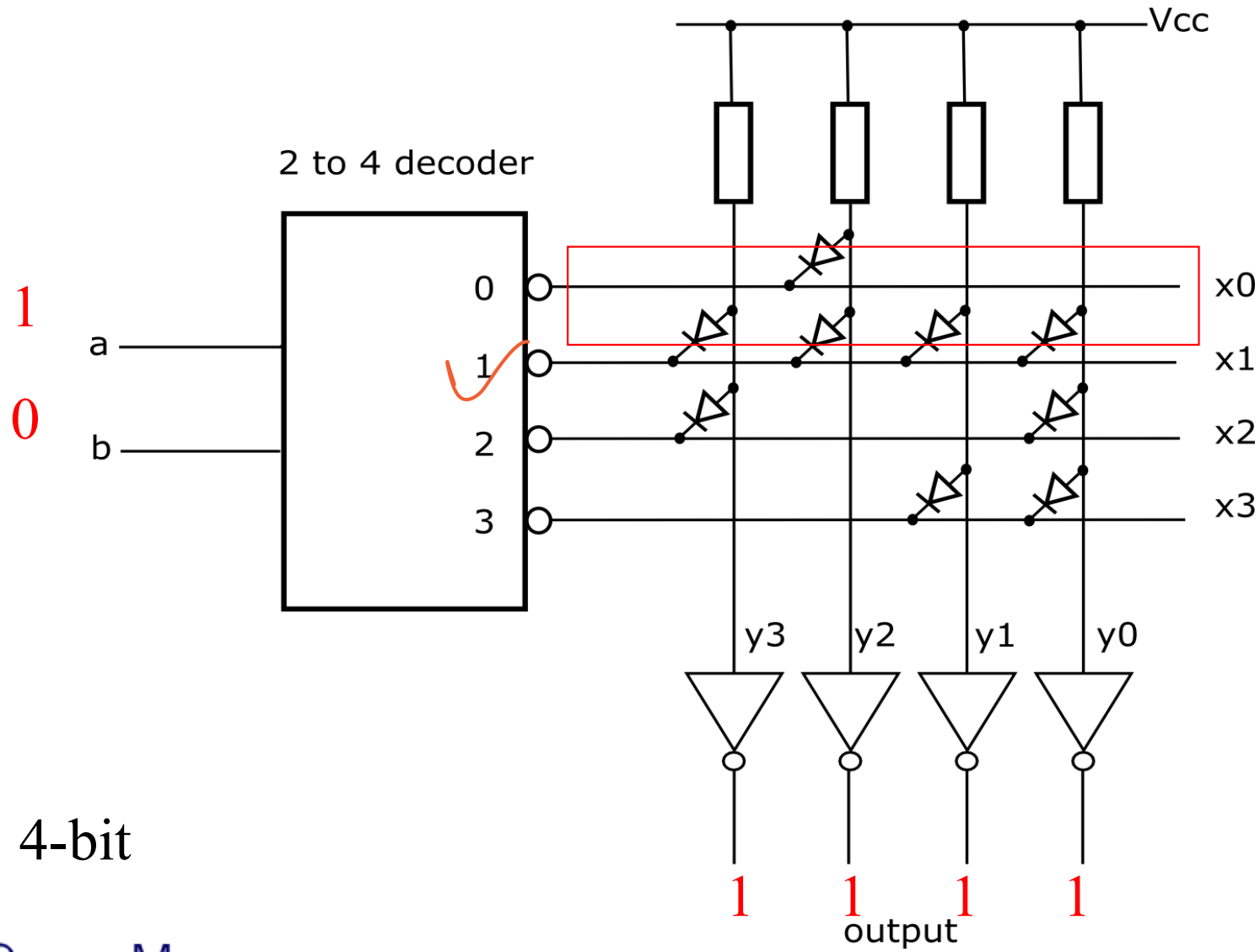

4 × 4-bit

ROM: Read Only Memory

2 dimensional decoding

用 decoder + multiplexer

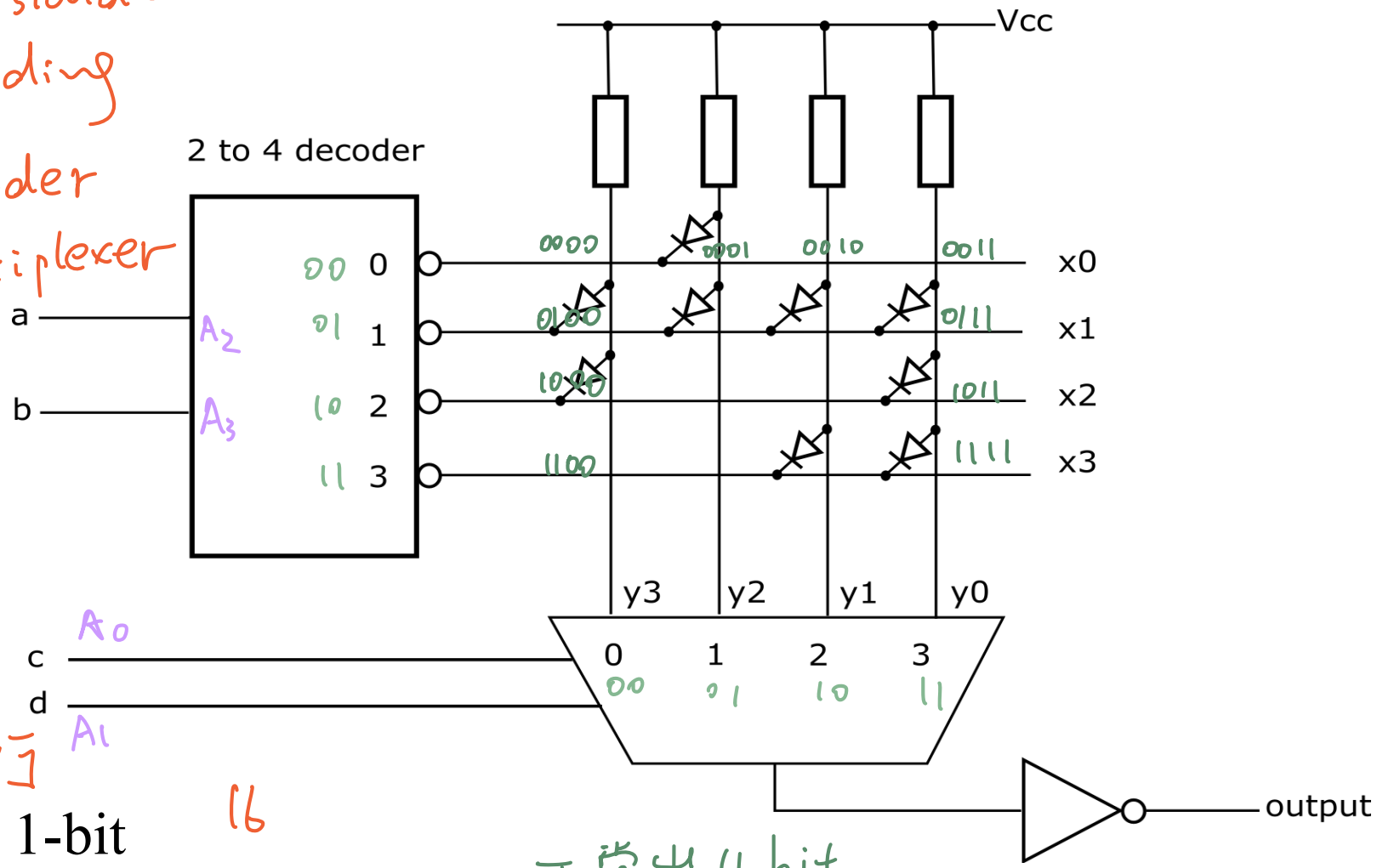

不是16行

16 × 1-bit

16

数字:badc

正常出4 bit

但这里要1个 ∴用MUX选1个

ROM: Read Only Memory

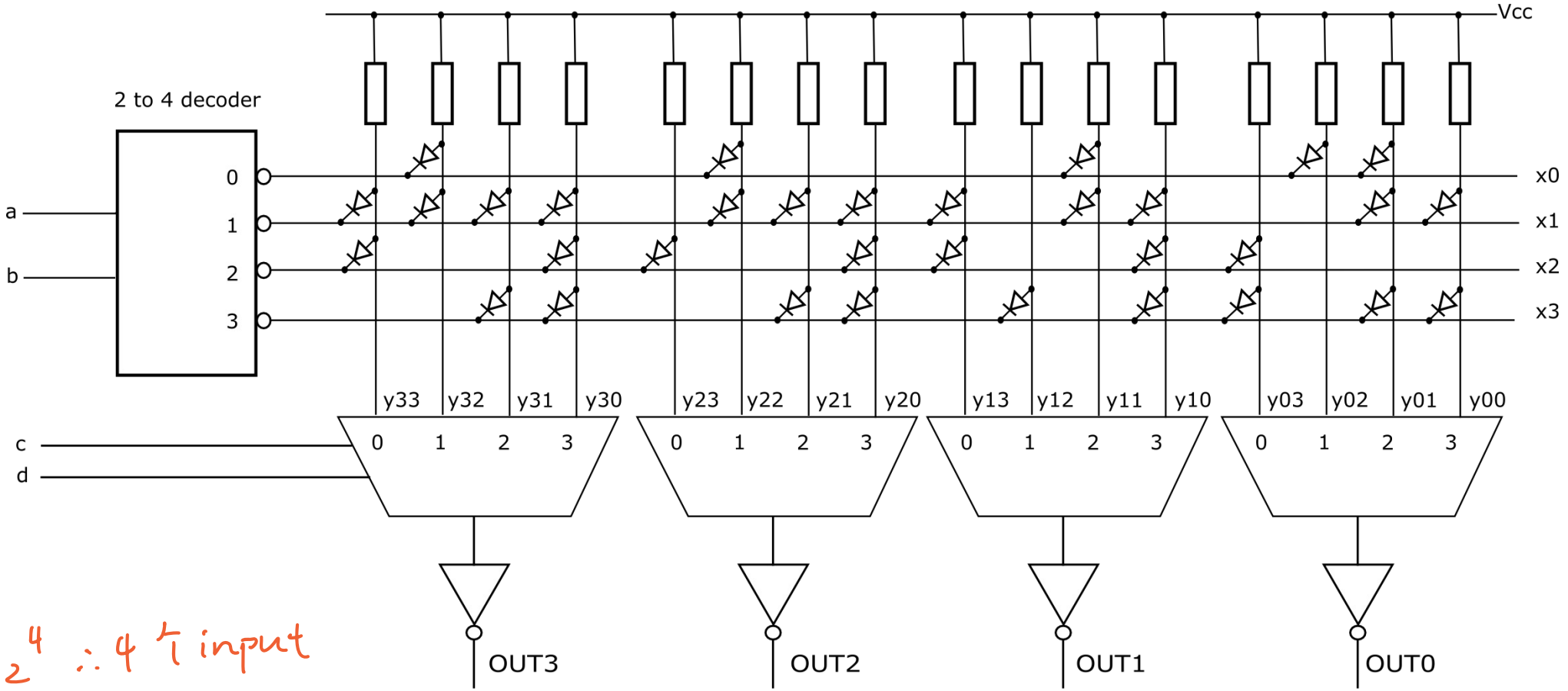

2^4 ∴ 4个input

↑

16 × 4-bit 不是弄16行

128×1 bit → 2^7 7个输入

可以3个decoder的，4个MUX的

Queen Mary University of London

OE : output enable

CS : chip selector

ROM: Read Only Memory

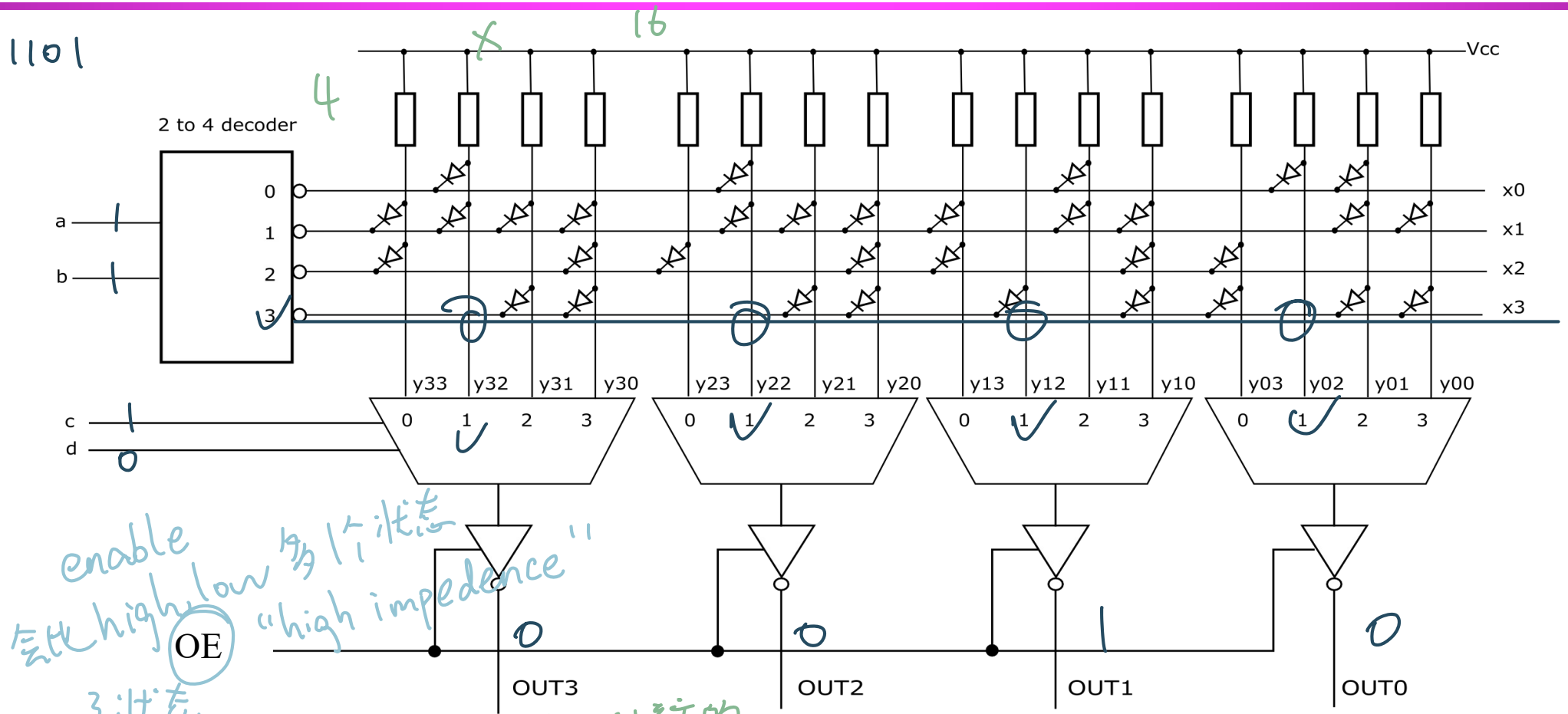

enable 会比high,low 多1个状态 "high impedence"

3状态

Tristate Outputs

enable output to be connected to a bus

现实中是这样的 但考试不考这种

比如设计 16×4 → 64 → 8×8

input A_1 A_2 A_3 ∴ 需3个input → control

这里 $8=2^3$ ← 8

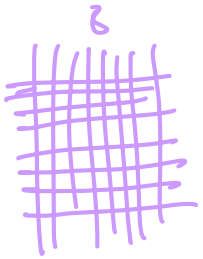

坚决的要4个 但有8个

∴ 用MUX 8÷2=4

∴ 用作control 即可

Queen Mary University of London

ROM Technologies

现在3+1条address line

- Mask ROM – programmed in manufacture
- PROM – Programmable ROM
- EPROM – Erasable PROM
- EEPROM – Electrically Erasable PROM

4509

0141

Memory Sizes

- Have dealt so far with very small memory sizes
- What about bigger memory devices?

Memory Sizes

- **Careful!**
- For memory sizes:

$$1k = 1024 = 2^{10}$$

- Not 1000 as with SI units

Term	Popular Usage	SI
Kilobyte (KB)	2^{10}	10^{3}
Megabyte (MB)	2^{20}	10^{6}
Gigabyte (GB)	2^{30}	10^{9}
Terabyte (TB)	2^{40}	10^{12}
Petabyte (PB)	2^{50}	10^{15}
Exabyte (EB)	2^{60}	10^{18}
Zettabyte (ZB)	2^{70}	10^{21}
Yottabyte (YB)	2^{80}	10^{24}

ROM Example Application

Provide next-state feedback and output for State Machine

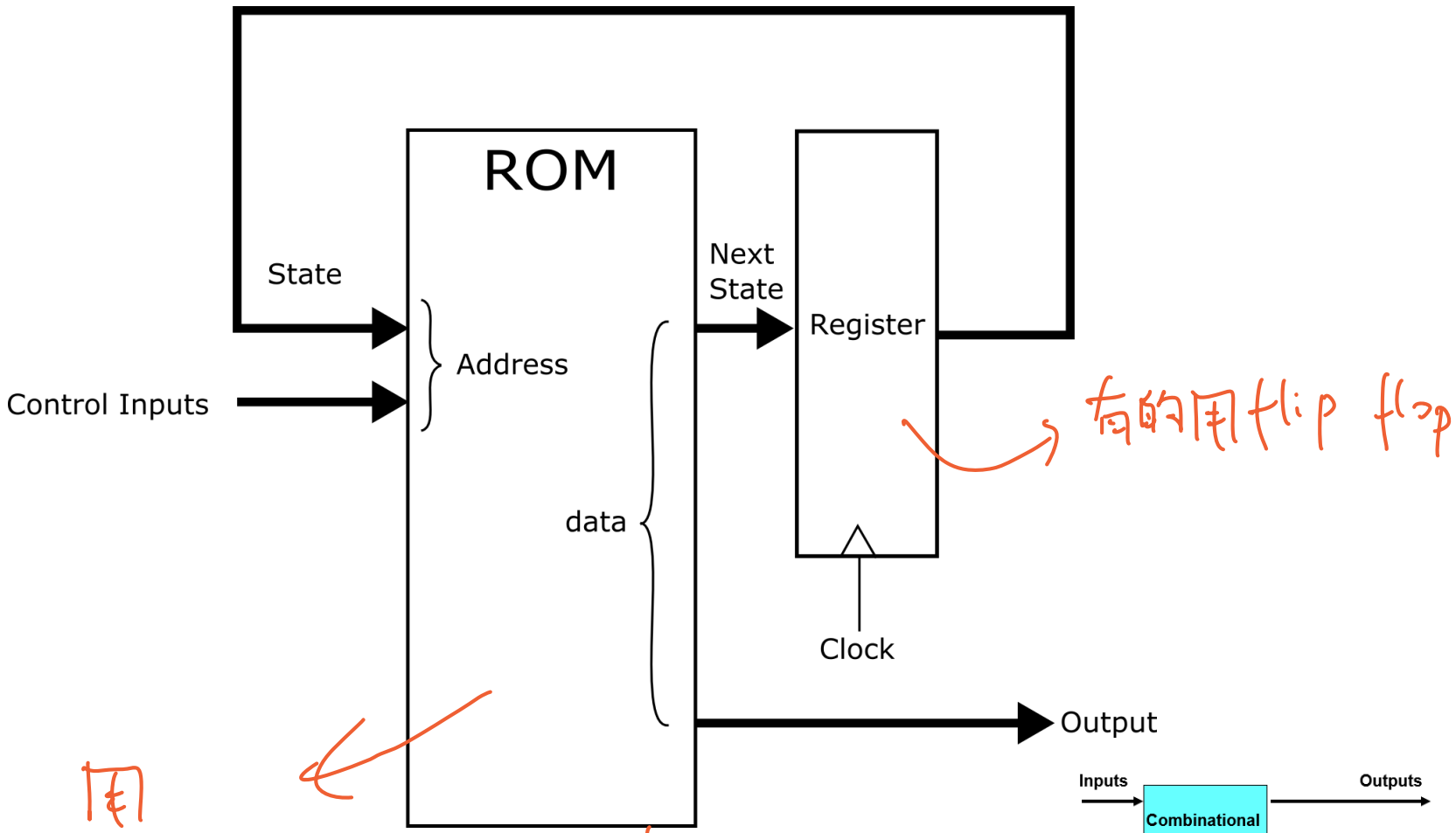

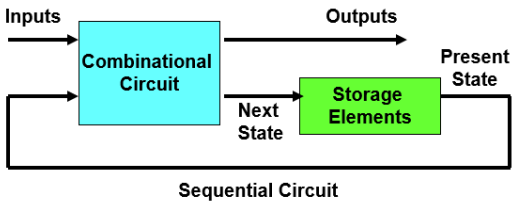

Microcomputer Block Diagram

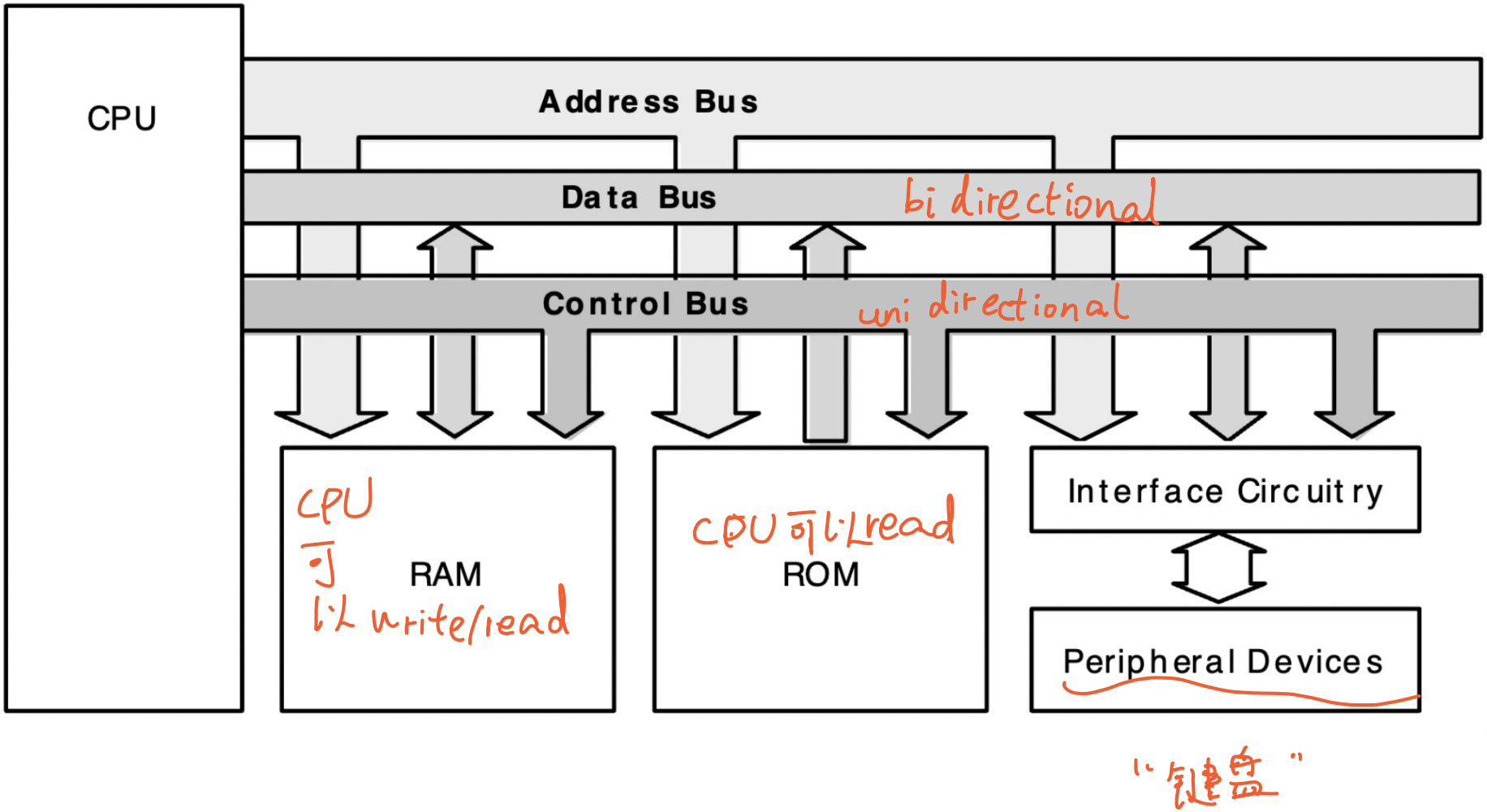

Microcomputer

- Examples of Control signals are:
    - Read/Write
    - Chip Select
    - Output Enable, etc.
- RAM can be a combination of volatile and non-volatile (SRAM/DRAM) as “working memory” and temporary storage.
- ROM is non-volatile, storing the operating system (e.g. Windows 10, iOS12, Linux, etc) and other permanent firmware.